# MOEN®

# Specifications

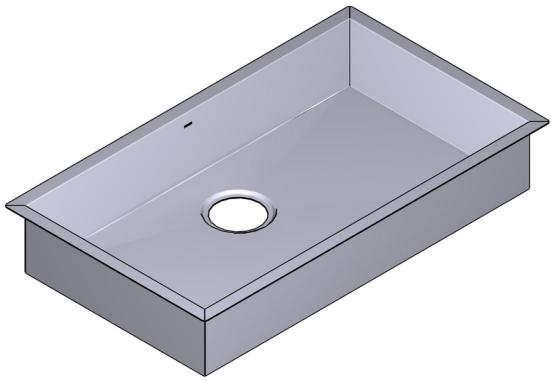

| Model Number | Faucet Holes | Depth-Inches | Drain Placement |
|---|---|---|---|
| GS181280B | N/A | 6" | Rear (Center) |
| BGS181210B *(Bulk Sku - Qty. 36)* | N/A | 6" | Rear (Center) |

## SINK DESCRIPTION

- 1800 Series single bowl undermount sink
- 18 gauge stainless steel, brushed finish
- Mounting brackets included, no other hardware included
- SoundSHIELD™ sound absorbing system
- Zero millimeter radius
- Sink is orderable in bulk, 36 units, under model: **BGS181210B**

## WARRANTY

- Lifetime limited warranty to the original homeowner
- 10 year limited warranty when used in a Multi-family installation
- 5 year limited warranty when used in a Commercial installation
- Visit www.moen.com/customer-support/warranty for complete details and limitations

## SINK DIMENSIONS

- Overall: 31" x 18"
- Bowl: 29" x 16"
- Drain Size: 3-5/8"

## CUT OUT DIMENSIONS

- Cut out template included
- Template ordering number 22519

## STANDARDS

- Third party certified to meet ASME A112.19.3/CSA B45.4 and all applicable specifications referenced therein
- **ADA**

## CRITICAL DIMENSIONS

(DO NOT SCALE)

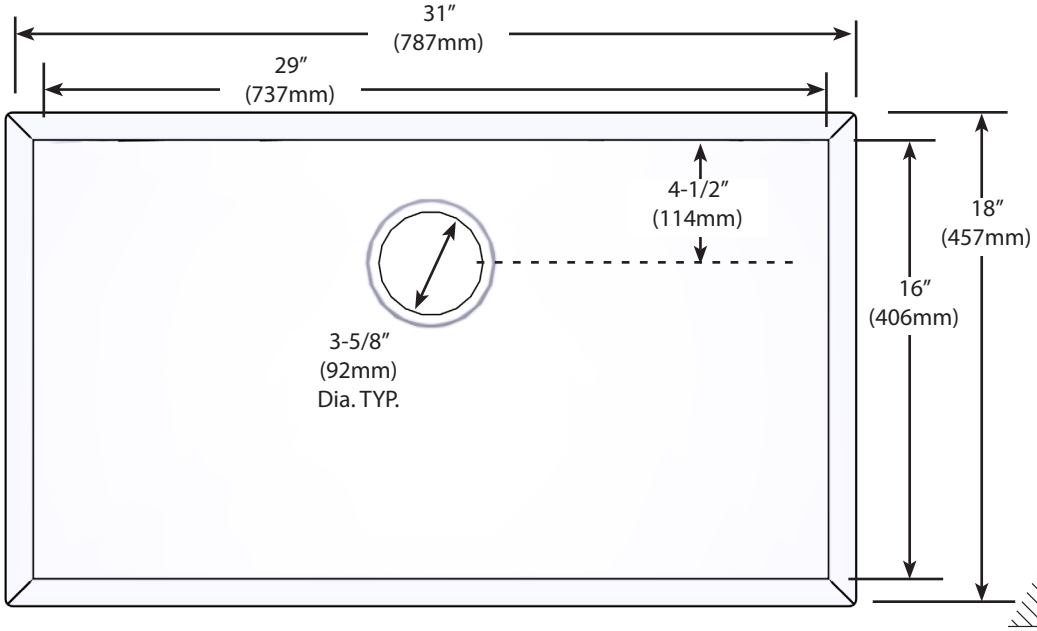


## Installation Detail

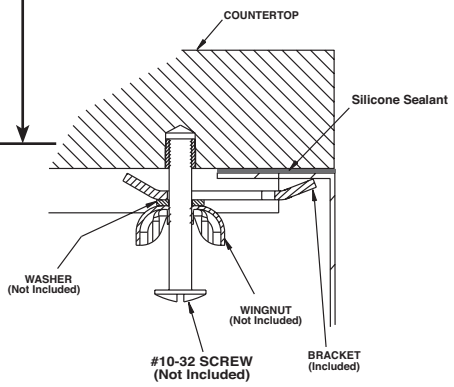


Rev. 3/22

**FOR MORE INFORMATION CALL: 1-800-BUY-MOEN**
**www.moen.com**