INSTALLATION INSTRUCTIONS

Item #6761 (Rev:05/10/2012)

READ AND SAVE THESE INSTRUCTIONS

WARNING! SHUT POWER OFF AT FUSE OR CIRCUIT BREAKER.

AVERTISSEMENT! COUPER LE COURANT AU NIVEAU DES FUSIBLES OU DU DISJONCTEUR.

MOUNTING THE BACKPLATE (Fig.1)

1. Shut off the power at the circuit breaker and remove old fixture, including the mounting hardware.
2. Carefully unpack your new fixture and lay out all the parts on a clear area. Take care not to lose any small parts necessary for installation.
3. Attach the Back-plate (A) to the Junction box with the Junction box Screws (B). The side of the Back-plate marked “GND” must face out.

CONNECTING THE WIRES (Fig. 2)

4. Connect the electrical wires as shown in Fig. 2, making sure that all wire connectors are secured. If your outlet box has a ground wire (green or bare copper), connect the fixture’s Ground Wire to it. Otherwise, connect the fixture’s Ground Wire directly to the Back-plate using the Green Screw provided. After the wires are connected carefully tuck them inside the Junction box.

FINISH MOUNTING FIXTURE (Fig.1)

5. Place the Fixture Body (E) over the Back-plate (A), and secured with Allen Screws (D) by the Wrench (C).
6. Place Shade (F) and Metal Tube (G) onto the lamp socket and secure with Screw Shell (H) tightly.
7. Install light bulbs in accordance with fixture specifications, **(DO NOT EXCEED THE MAXIMUM WATTAGE RATING!) (NE PAS DEPASSER LA PUISSANCE NOMINALE MAXIMALE!)**

Your installation is now complete. Return power and test the fixture.

Note: Illustration (Fig. 1) on this manual is for installation purposes only. It may or may not be identical to the fixture purchased

Fig. 1

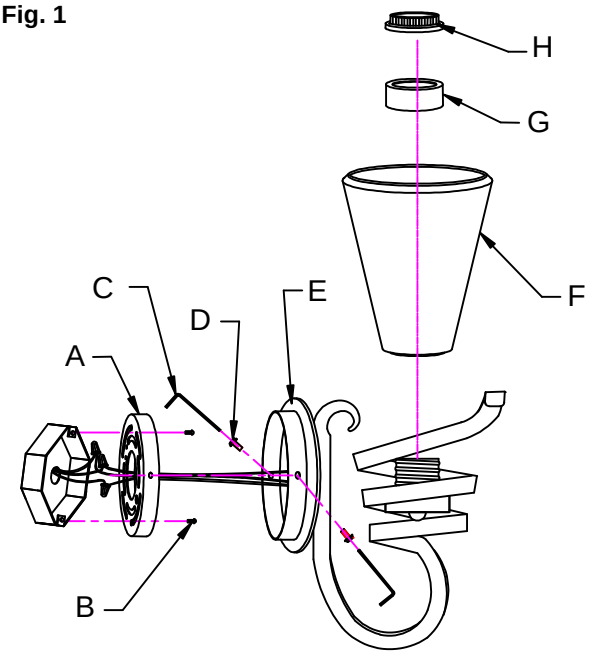

Fig. 2

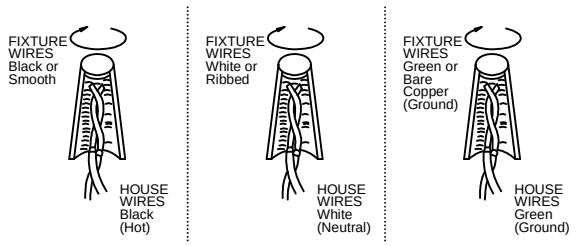

Intertek

american lighting association